PROJECT: Welcome to Autryville Sign and Landscaping, Autryville, North Carolina

PROPOSED HIGHWAY LANDSCAPE DEVELOPMENT PROJECT

T.I.P. #	STATE PROJECT W.B.S. #	SHEET #	SHEET # TOTAL
	3703.3.34	L1	5
FED. PROJ. #	DESCRIPTION		DIVISION
	landscape		3

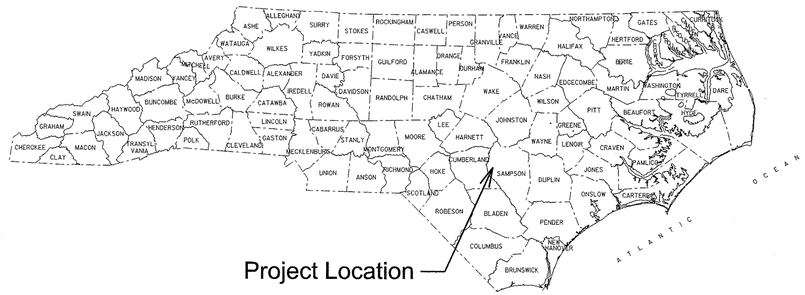

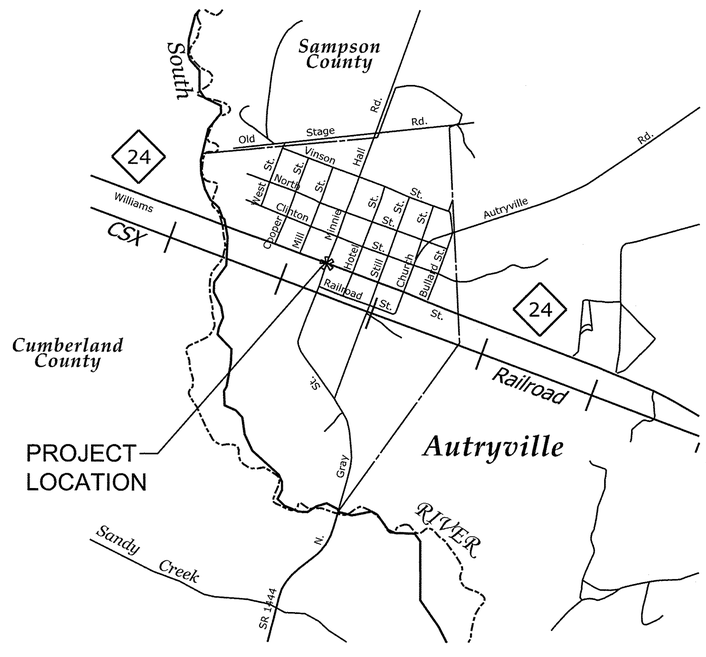

NOTE:
A SURVEY WAS NOT PERFORMED FOR THIS PROJECT.
THE PLANS WERE CREATED FROM AERIAL PHOTOGRAPHY.
CONTRACTOR WILL NEED TO FIELD VERIFY ALL EXISTING FEATURES.

CONVENTIONAL SYMBOLS

- County Line
- City or Town Line
- Exist. Right of Way Line Marker
- Prop. Right of Way Line Marker (By Others)
- Prop Right of Way Line Marker (By Contract)
- Exist. Control of Access Line
- Prop. Control of Access Line
- Property Line
- Easement Line
- Slope Stake Line
- Exist. Fence
- Prop. Woven Wire Fence
- Prop. Chain Link Fence
- Exist. Road
- Prop. Road
- Guardrail
- Survey Line
- Denotes Line Equality
- Bridge
- Culvert
- Railroad
- Woods
- Exist. Telephone Pole
- Prop. Telephone Pole
- Tower Pole and Line
- Exist. Power Pole
- Prop. Power Pole
- Sanitary Sewer Line
- Water Line
- Gas Line
- Picnic Shelter
- Regeneration
- Reforestation

INDEX OF SHEETS:

L1 ... TITLE SHEET
L2 ... PROJECT 1
L3 ... DETAILS
L4.... DETAILS
L5.... DETAILS

PREPARED BY: NN DATE: MAR/2013

REVISIONS

DATE	DESCRIPTION

STATE OF NORTH CAROLINA DEPARTMENT OF TRANSPORTATION

STATE OF
NORTH CAROLINA
DEPARTMENT OF TRANSPORTATION

LOCATION: Autryville, North Carolina

TYPE of WORK: Welcome to Autryville Sign and Landscaping

COUNTY: Sampson

NORTH CAROLINA REGISTERED LANDSCAPE ARCHITECT 1146 03/19/13 NIKOLAY A. NIKOLAEV

2004 American Standard for Nursery Stock

2012 NCDOT STANDARD SPECIFICATIONS

PREPARED IN THE OFFICE OF:
ARCADIS
C & M of North Carolina, Inc.
WWW.ARCADIS-US.COM
801 Corporate Center Drive, Suite 300
Raleigh, NC 27607-5073
Tel: 919/854-1282 Fax: 919/854-5448 NC License No. C-1869

$$$$$$$$SYSTIME$$$$$$
$$$$$$$$$$$$$$$$$$$$DGN$$$$$$$$$$$$$$$$$$$$
$$$$$$USERNAME$$$$$$

SUMMARY OF PROJECT QUANTITIES

TYPE	QUANTITY	UNIT	SEC	SYMBOL	BOTANICAL NAME	COMMON NAME	CALIPER	HEIGHT	SPREAD	ROOT	COMMENTS
SHRUBS	8	EA	1670	RR	*Rosa x red 'Double Knock out'*	Red Knock–out Roses				CONT. 3 GAL.	36" O.C. SPACING
					DESCRIPTION						
	1	LS			SIGN						
	32	LF			6' x 10' PLANTER PRESSURE TREATED TIMBER						
	1.5	CY.			8" TOPSOIL						
	0.6	CY.			3" MULCH FOR PLANTING						

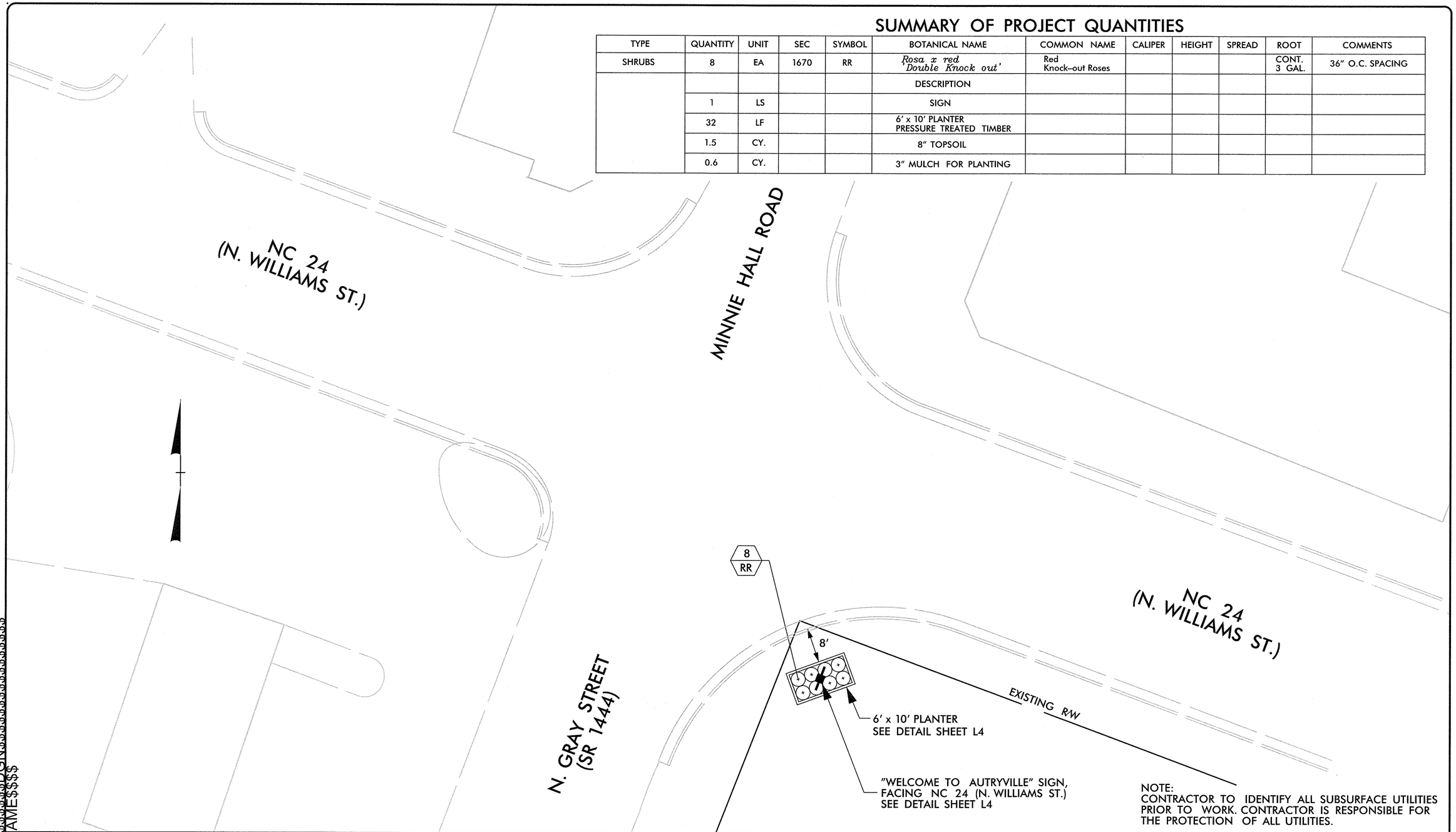

NOTE:
CONTRACTOR TO IDENTIFY ALL SUBSURFACE UTILITIES PRIOR TO WORK. CONTRACTOR IS RESPONSIBLE FOR THE PROTECTION OF ALL UTILITIES.

$$$$SYSTIME$$$$
$$$$USERNAME$$$$DGN$$$$

NCDOT - Division 3 - Roadside Environmental Unit
803 Penderlea Highway Burgaw, NC 28425
Ph: 910-259-4919 Fax: 910-259-2781
Contact: Joe Chance

ARCADIS
G & M of North Carolina, Inc.
WWW.ARCADIS-US.COM
801 Corporate Center Drive, Suite 300
Raleigh, NC 27607-5073
Tel: 919/854-1282 Fax: 919/854-5448
NC License No. C-1869
Contact: Nick Nikolaev

Welcome to Autryville Sign & Landscaping
Autryville, NC
Sampson County
contract #:

NORTH CAROLINA REGISTERED LANDSCAPE ARCHITECT 1146 NICKOLAY A. NIKOLAEV 03/19/13

sheet description:

prel. design date : March/2013
checked by & date :
final design date :

Planting Plan
Scale: 1" = 10'

STATE OF NORTH CAROLINA DEPARTMENT OF TRANSPORTATION

T.I.P. #
WBS # 3703.3.34
FED I.D. #
sheet no : L2
total sheet no : 5

SIGN IS .125 ALUMINUM WITH ENGINEER GRADE (EG) VINYL AS PER BRANDON INDUSTRIES OR APPROVED EQUAL

SIGN PANEL AND POST:
MANUFACTURED BY: BRANDON INDUSTRIES, INC.
1601 WILMETH RD.
McKINNEY, TEXAS 75069–8250
PH. (972) 542–3000
OR APPROVED EQUAL

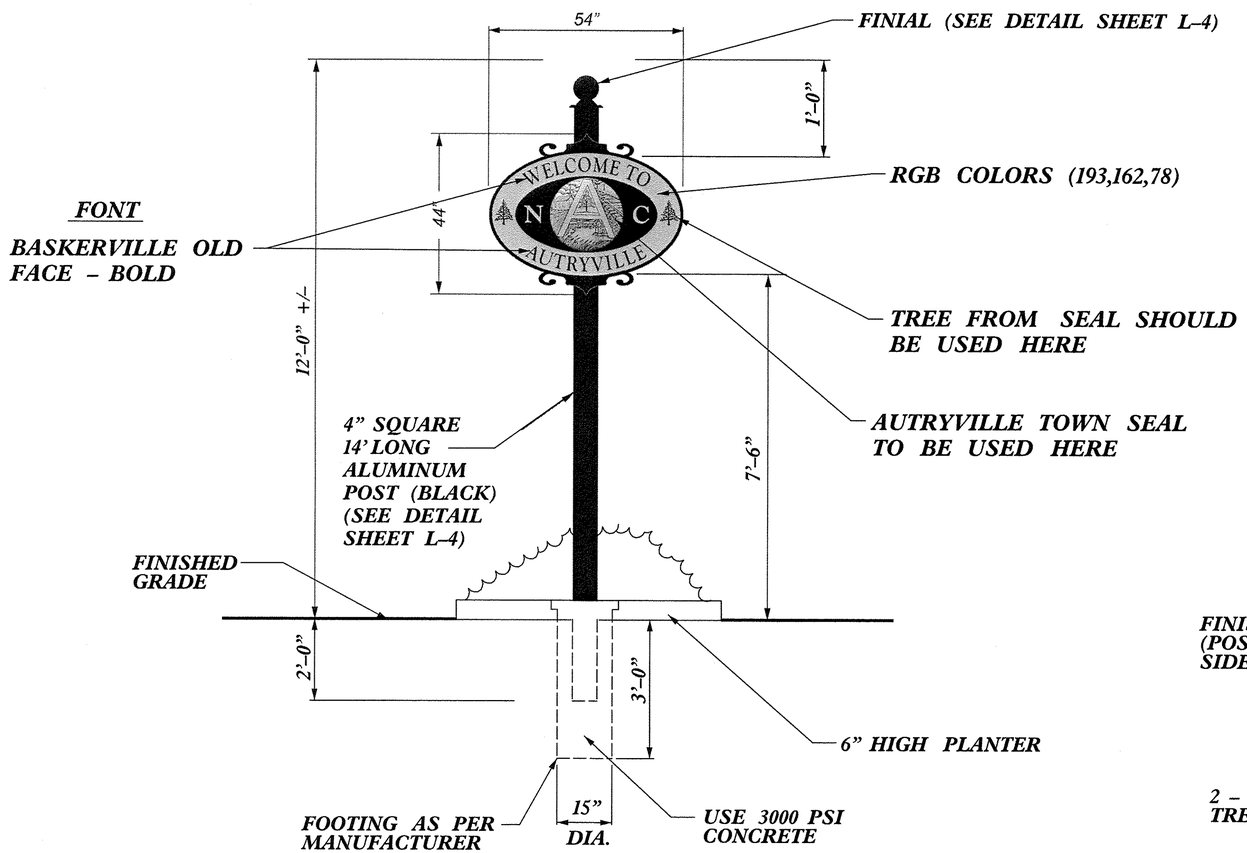

SIGN DETAIL
N.T.S.

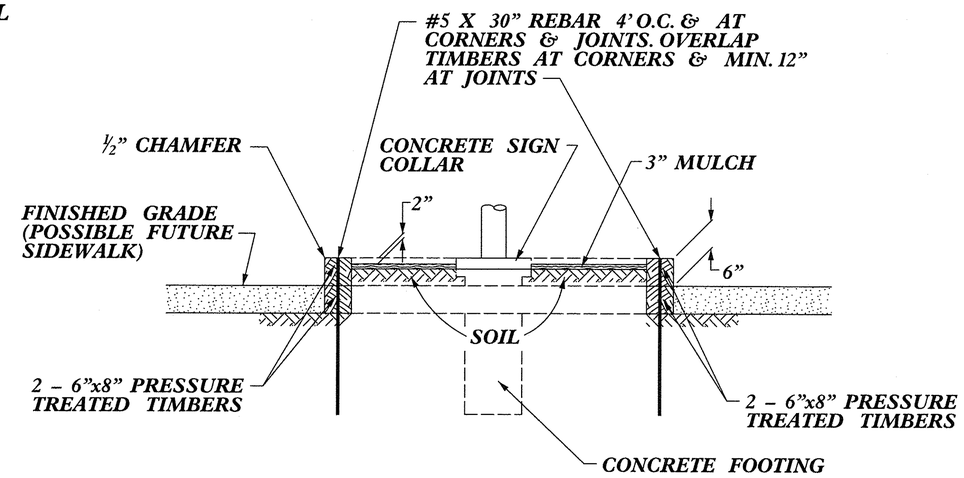

PLANTER DETAIL
N.T.S.

NCDOT - Division 3 - Roadside Environmental Unit
803 Penderlea Highway Burgaw, NC 28425
Ph: 910-259-4919 Fax: 910-259-2781
Contact: Joe Chance

ARCADIS
G & M of North Carolina, Inc.
WWW.ARCADIS-US.COM
801 Corporate Center Drive, Suite 300
Raleigh, NC 27607-5073
Tel: 919/854-1282 Fax: 919/854-5448
NC License No. C-1869
Contact: Nick Nikolaev

Welcome to Autryville Sign & Landscaping
Autryville, NC
Sampson County
contract #:

NORTH CAROLINA REGISTERED LANDSCAPE ARCHITECT 1146 NIKOLAY A. NIKOLAEV 09/19/13

sheet description:

prel. design date : March/2013	Details	T.I.P. #
checked by & date :		WBS # 3703.3.34
final design date :		FED I.D. #
		sheet no : L3 / total sheet no : 5

STATE OF NORTH CAROLINA DEPARTMENT OF TRANSPORTATION

$$$$SYSTIME$$$$
$$$$DGN$$$$
$$$$USERNAME$$$$

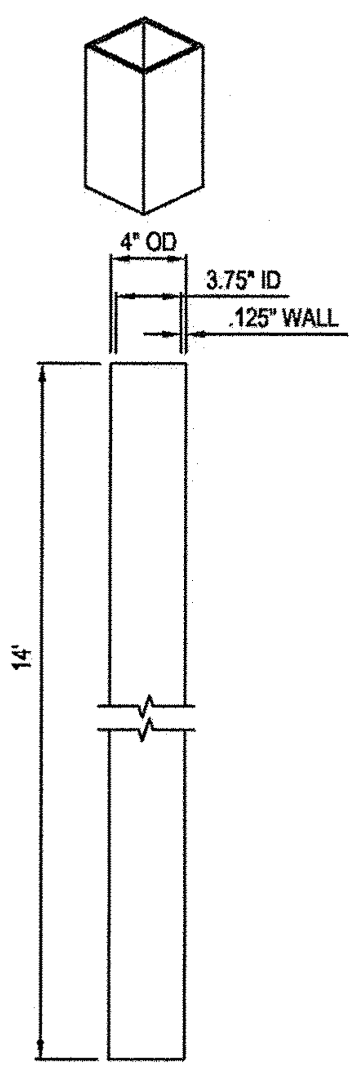

CPQ4X
SQUARE POLE

BRANDON INDUSTRIES
1601 W. WILMETH RD.
MCKINNEY, TX 75069-8250
TOLL FREE: 1-800-247-1274
FAX: (972) 542-1015
www.brandonindustries.com

NOTES:
1. INSTALLATION TO BE COMPLETED IN ACCORDANCE WITH MANUFACTURER'S SPECIFICATIONS.
2. ALL DIMENSIONS ARE CONSIDERED TRUE AND REFLECT MANUFACTURER'S SPECIFICATIONS.
3. DO NOT SCALE DRAWING.
4. THESE DRAWINGS ARE NOT FOR CONSTRUCTION PURPOSES AND ARE FOR INFORMATION PURPOSES ONLY. ALL INFORMATION CONTAINED HEREIN WAS CURRENT AT THE TIME OF DEVELOPMENT BUT MUST BE REVIEWED AND APPROVED BY THE PRODUCT MANUFACTURER TO BE CONSIDERED ACCURATE.
5. CONTRACTOR'S NOTE: FOR PRODUCT AND COMPANY INFORMATION VISIT www.CADdetails.com/info REFERENCE NUMBER 2922-002.

CUSTOM MADE SIGN SYSTEMS - POLE

4" POLES

2922-002 REVISION DATE 12/13/2012

PROTECTED BY COPYRIGHT ©2012 CADdetails.com LTD.
www.CADdetails.com

OR APPROVED EQUAL

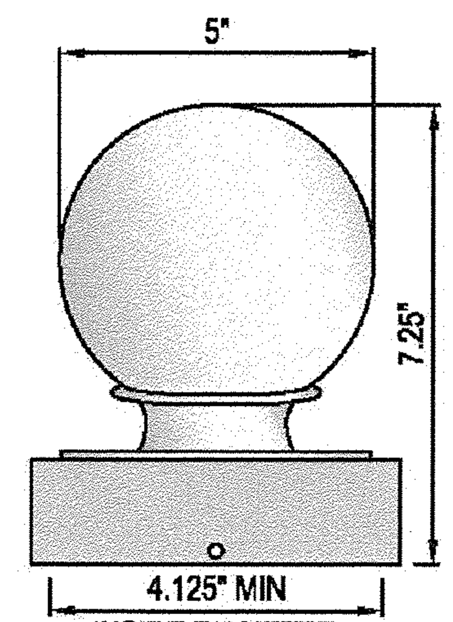

FINQ-B4

BRANDON INDUSTRIES
1601 W. WILMETH RD.
MCKINNEY, TX 75069-8250
TOLL FREE: 1-800-247-1274
FAX: (972) 542-1015
www.brandonindustries.com

NOTES:
1. INSTALLATION TO BE COMPLETED IN ACCORDANCE WITH MANUFACTURER'S SPECIFICATIONS.
2. ALL DIMENSIONS ARE CONSIDERED TRUE AND REFLECT MANUFACTURER'S SPECIFICATIONS.
3. DO NOT SCALE DRAWING.
4. THESE DRAWINGS ARE NOT FOR CONSTRUCTION PURPOSES AND ARE FOR INFORMATION PURPOSES ONLY. ALL INFORMATION CONTAINED HEREIN WAS CURRENT AT THE TIME OF DEVELOPMENT BUT MUST BE REVIEWED AND APPROVED BY THE PRODUCT MANUFACTURER TO BE CONSIDERED ACCURATE.
5. CONTRACTOR'S NOTE: FOR PRODUCT AND COMPANY INFORMATION VISIT www.CADdetails.com/info REFERENCE NUMBER 2922-006.

CUSTOM MADE SIGN SYSTEMS - FINIAL

FINIALS FOR 4" OD SQUARE POLES

2922-006 REVISION DATE 12/14/2012

PROTECTED BY COPYRIGHT ©2012 CADdetails.com LTD.
www.CADdetails.com

OR APPROVED EQUAL

$$$$$$SYSTIME$$$$$$
$$$$$$$$$$$$$$$$DGN$$$$$$$$$$$$$$$$$$
$$$$$USERNAME$$$$$

NCDOT - Division 3 - Roadside Environmental Unit
803 Penderlea Highway Burgaw, NC 28425
Ph: 910-259-4919 Fax: 910-259-2781
Contact: Joe Chance

ARCADIS
G & M of North Carolina, Inc.
WWW.ARCADIS-US.COM
801 Corporate Center Drive, Suite 300
Raleigh, NC 27607-5073
Tel: 919/854-1282 Fax: 919/854-5448
NC License No. C-1869
Contact: Nick Nikolaev

Welcome to Autryville Sign & Landscaping
Autryville, NC
Sampson County
contract #:

NORTH CAROLINA REGISTERED LANDSCAPE ARCHITECT 03/19/13 1146 NIKOLAY A. NIKOLAEV

sheet description:		
prel. design date :	March/2013	Details
checked by & date :		
final design date :		

T.I.P. #
WBS # 3703.3.34
FED I.D. #
sheet no : L4 total sheet no : 5

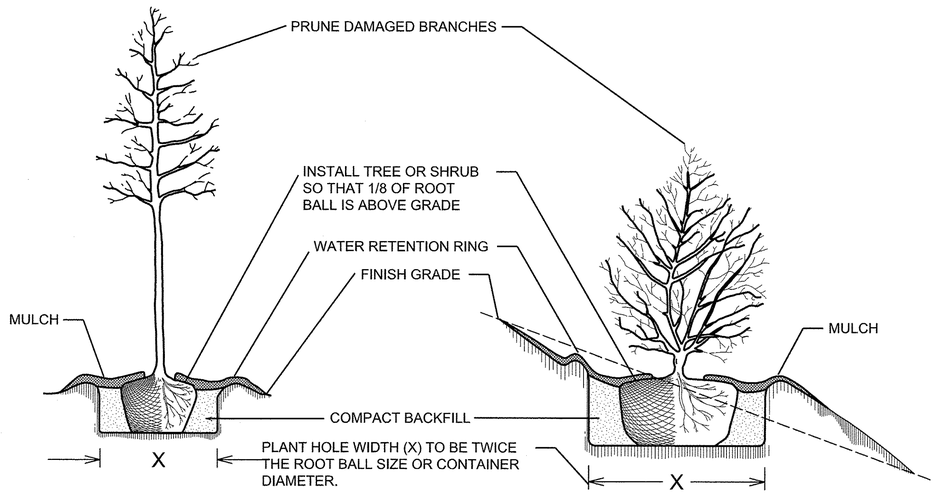

TREE OR SHRUB PLANTING DETAIL
(LEVEL GROUND)

TREE OR SHRUB PLANTING DETAIL
(SLOPING GROUND)

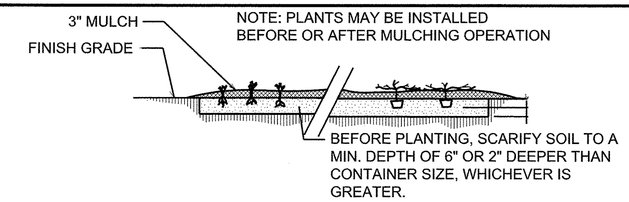

GROUND COVER/ BEDDING PLANT DETAIL

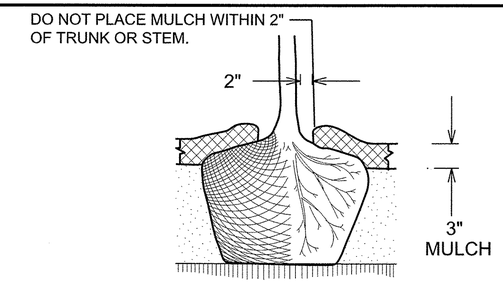

MULCH DETAIL

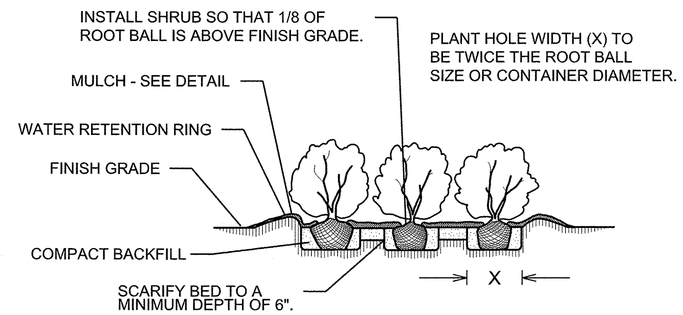

SHRUB BED PLANTING DETAIL

NOTES:

- SCHEDULE FOR PLANT HOLE SIZE: PLANT HOLE WIDTH (X) TO BE TWICE THE ROOT BALL SIZE OR CONTAINER DIAMETER.
- SEE STANDARD SPECIFICATIONS FOR PLANT BED FUMIGATION AND HERBICIDAL TREATMENT.
- APPLY FERTILIZER AT PLANTING TIME IN THE FORM OF A SLOW RELEASE PELLET OR TABLET. APPLY AT RATE RECOMMENDED BY MANUFACTURER. BOTH RATE AND FORMULATION MUST BE APPROVED BY FIELD ENGINEER PRIOR TO APPLICATION.
- REMOVE WIRE BASKET AND FOLD BURLAP BACK FROM TOP OF ROOT BALL BEFORE BACKFILLING IS COMPLETE.
- ALL PRUNING TO FOLLOW STANDARD ARBORICULTURAL PRACTICES AS SPECIFIED BY INTERNATIONAL SOCIETY OF ARBORICULTURE.
- DO NOT ATTEMPT TO STRAIGHTEN A TREE THAT HAS BEEN PLANTED AT AN ANGLE WITH THE USE OF STAKING OR GUYING. DIG TREE AND REPLANT TO UPRIGHT POSITION.

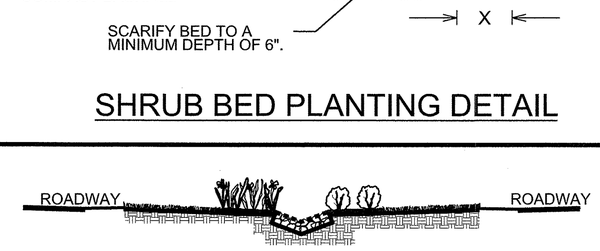

WASHED RIVER STONE (MIN. 2 INCH - MAX 6 INCH DIAM) ON FILTER FABRIC LINER IN DITCH. PLACE STONE FLUSH WITH DITCH GRADE FOR MAXIMUM WATER FLOW.

RIVERSTONE DITCH LINING DETAIL

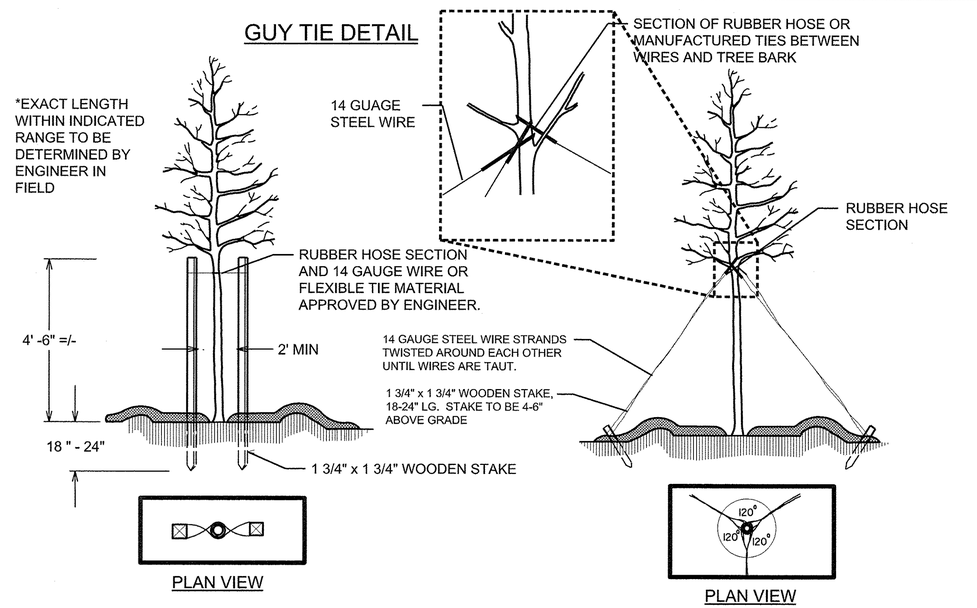

STAKING DETAIL
(TREES 6'-10')
USE AS DIRECTED BY FIELD ENGINEER

GUYING DETAIL
(TREES 10' OR LARGER)
USE AS DIRECTED BY FIELD ENGINEER

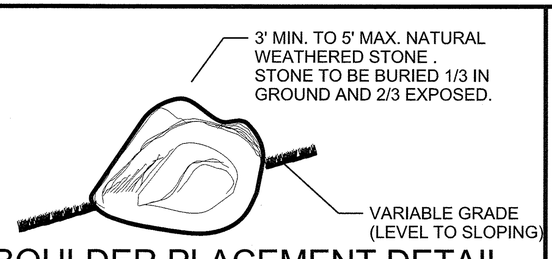

BOULDER PLACEMENT DETAIL TYPICAL

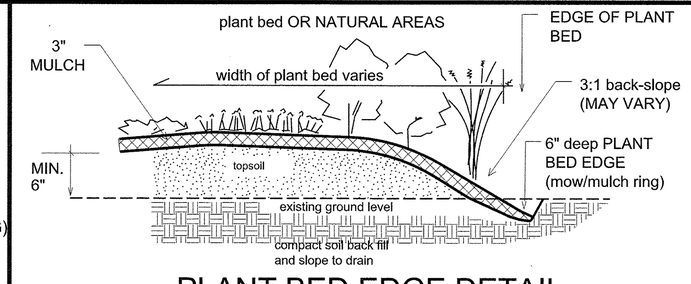

PLANT BED EDGE DETAIL

NCDOT - Division 3 - Roadside Environmental Unit
803 Perdenlea Highway Burgaw, NC 28425
Ph: 910-259-4919 Fax: 910-259-2781
Contact: Joe Chance

ARCADIS
G & M of North Carolina, Inc.
WWW.ARCADIS-US.COM
801 Corporate Center Drive, Suite 300
Raleigh, NC 27607-5073
Tel: 919/854-1282 Fax: 919/854-5448
NC License No. C-1869
Contact: Nick Nikolaev

Welcome to Autryville Sign & Landscaping
Autryville, NC
Sampson County
contract #:

NORTH CAROLINA LANDSCAPE ARCHITECT 03/19/13 1146 NIKOLAY A. NIKOLAEV

sheet description:

prel. design date :	March/2013	Details
checked by & date :		
final design date :		

STATE OF NORTH CAROLINA DEPARTMENT OF TRANSPORTATION

T.I.P. #
WBS # 3703.3.34
FED I.D. #
sheet no : L5
total sheet no : 5

$$$$SYSTIME$$$$
$$$$DGN$$$$
$$$$USERNAME$$$$